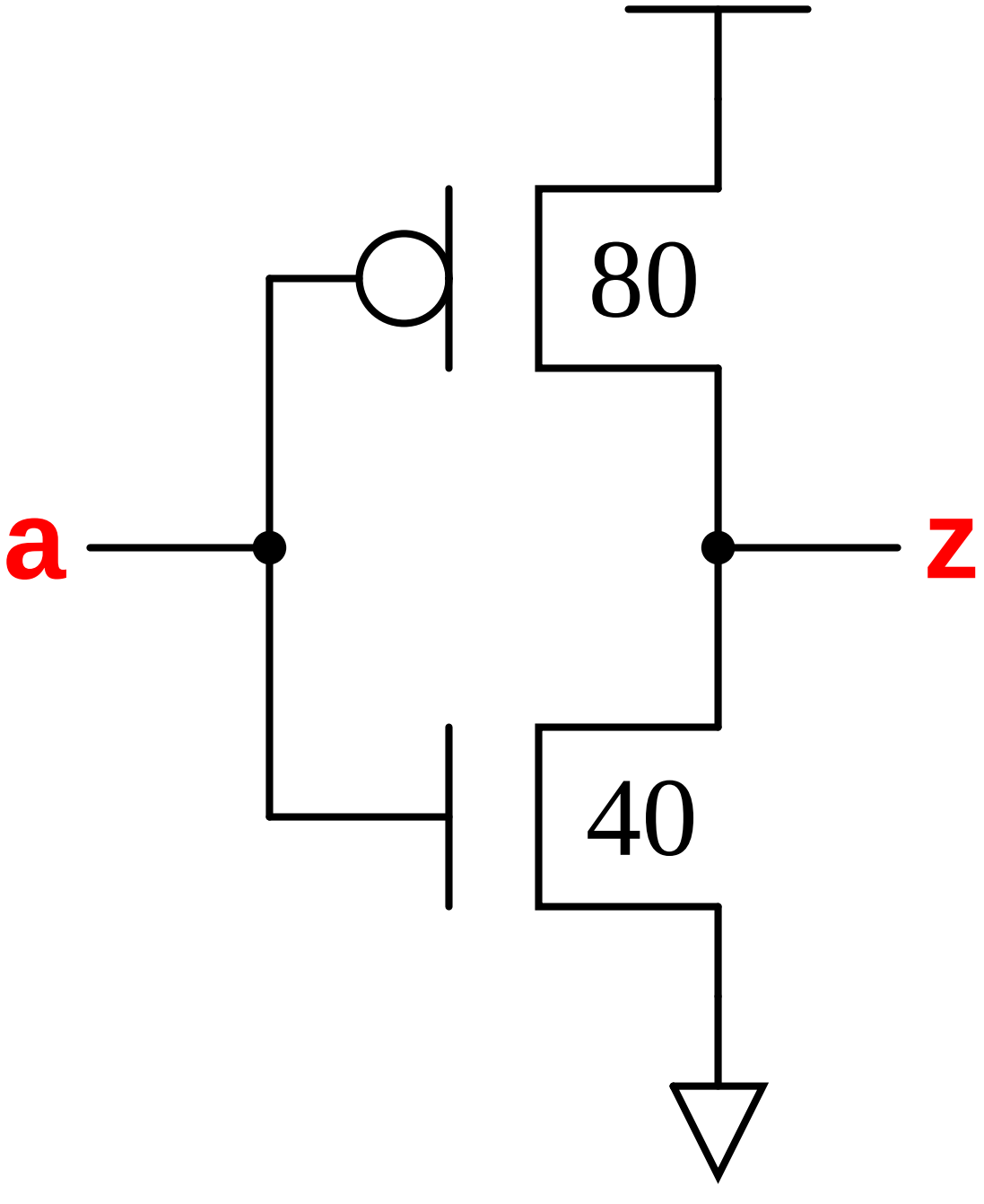
80
a
z
40