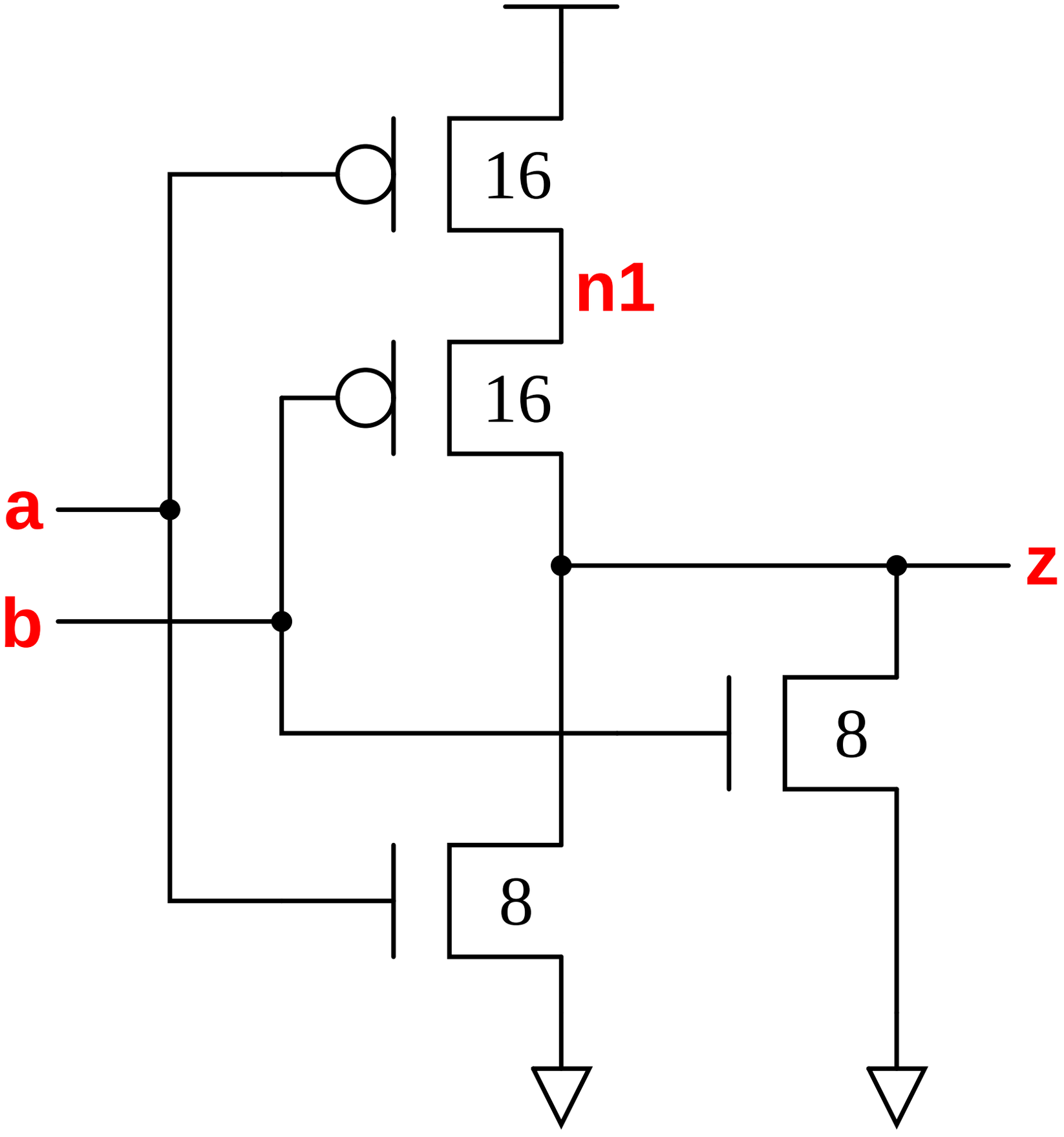
16
n1
16
a
b
z
8
8