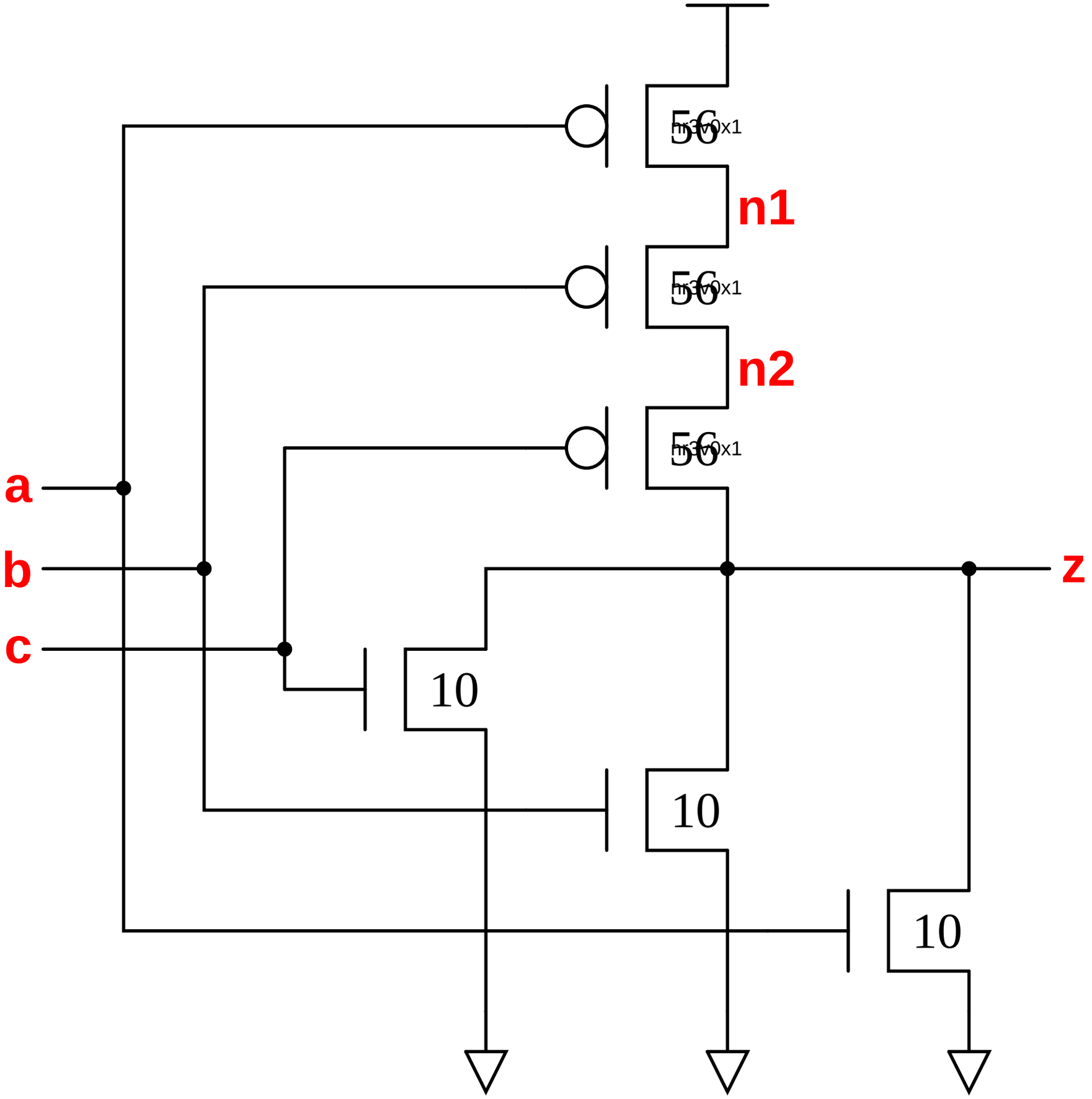
56
nr3v0x1
n1
56
nr3v0x1
n2
56
nr3v0x1
a
b
c
z
10
10
10