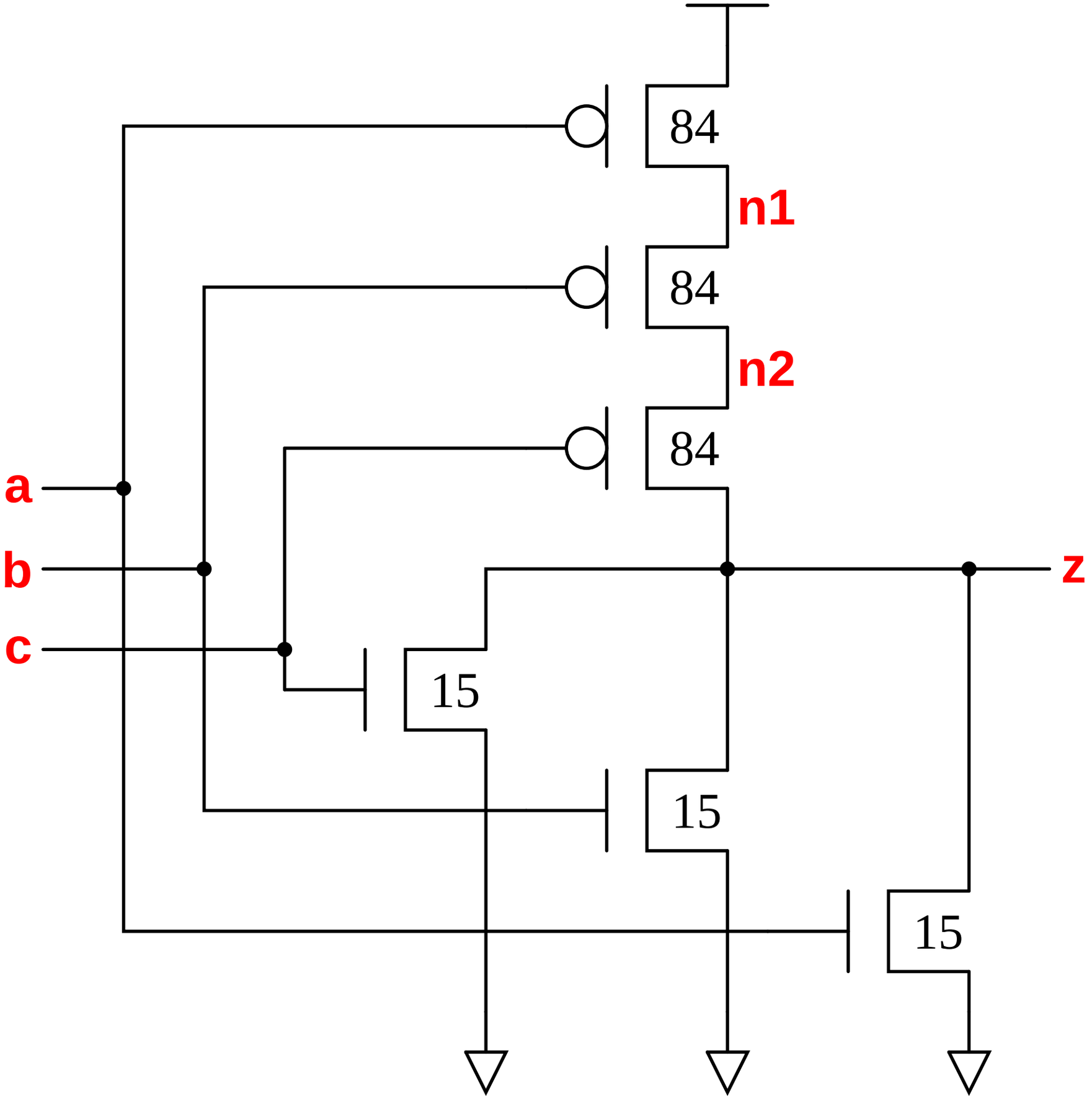
84
n1
84
n2
84
a
b
c
z
15
15
15