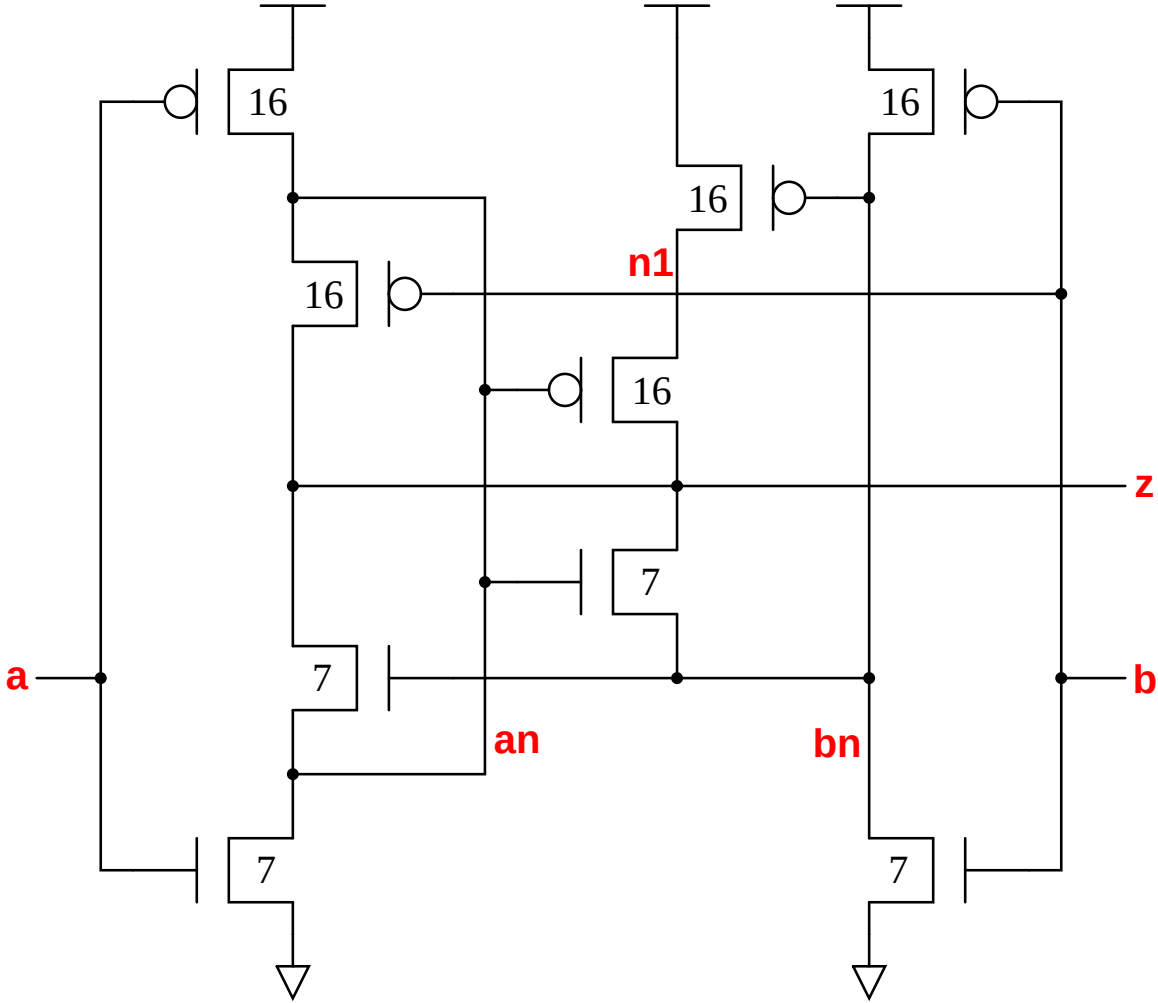
16
16
16
n1
16
16
z
7
a
7
b
an
bn
7
7