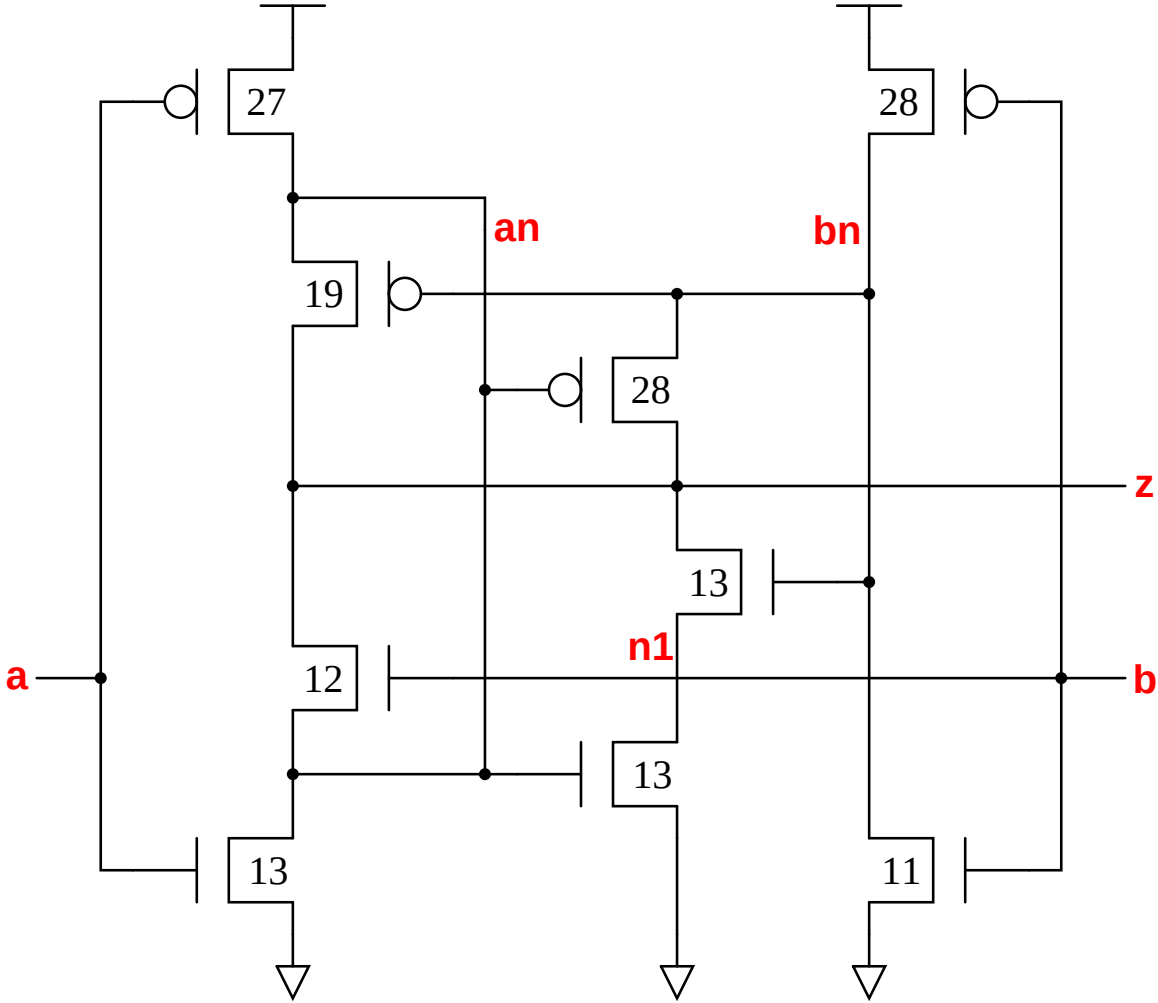
27
28
an
bn
19
28
z
13
n1
a
12
b
13
13
11